INSTALLATION & OPERATING INSTRUCTIONS for GSM & GSMS SEALED COMBUSTION CONDENSING FURNACES

(CATEGORY IV)

WARNING
IF THIS FURNACE IS INSTALLED IN AN ENCLOSED AREA, SUCH AS A GARAGE OR UTILITY ROOM, WITH ANY OTHER **CARBON MONOXIDE** PRODUCING DEVICE (i.e. AUTOMOBILE, SPACE HEATER ETC.) INSURE THAT THE ENCLOSED AREA IS PROPERLY VENTILATED.

WARNING
CARBON MONOXIDE (REFERRED TO AS CO) CAN CAUSE SERIOUS PERSONAL INJURY OR DEATH

WARNING
THIS FURNACE IS DESIGN CERTIFIED FOR INSTALLATION IN BUILDINGS CONSTRUCTED ON SITE ONLY.

IO-176A

Goodman Manufacturing Company,L.P.
2550 North Loop West, Suite 400, Houston, TX 77092
www.goodmanmfg.com

12/01

REPLACEMENT PARTS

Replacement parts for this appliance is available through your contractor or local distributor. For the location of your nearest distributor consult the white business pages, the yellow page section of the local telephone book or contact;

SERVICE PARTS DEPARTMENT
GOODMAN MANUFACTURING CO., LP
2550 NORTH LOOP WEST, SUITE 400
HOUSTON, TEXAS 77092
(713) 861 - 2500

The major parts groups are as follows;

BLOWER ASSEMBLY
Motor
Blower housing
Blower wheel
Misc. sheet metal items
Capacitor

HEAT EXCHANGER
Heat exchanger sections
Innerfront
Secondary coil

ELECTRICAL CONTROLS
Control board
Auxiliary / main limit switch
Roll-out switch
Transformer
Door interlock switch
Air pressure switch
Induced draft blower

BURNER ASSEMBLY
Burners
Manifold
Orifices
Gas valve
Ignitor
Flame sensor

MISCELLANEOUS
Wrapper
Access doors
Chimney
Gaskets and seals
Wiring assemblies

To effectively process the parts requirement, the distributor / contractor will need the entire model number and serial number found on the series and rating plate located inside the blower compartment.

INDEX

WARNINGS & GENERAL INFORMATION	4
INSTALLATION	5
LOCATION	6, 7
COMBUSTION AIR	7 - 9
VENTING	9,10
HORIZONTAL THROUGH THE WALL VENTING	11, 12
JOINING PIPE, DRAIN CONNECTIONS	12, 13
GAS PIPING AND GAS PIPE CAPACITY TABLE	13, 14
CIRCULATING AIR SUPPLY, RETURN AIR	15
ELECTRICAL SUPPLY AND CONTROL VOLTAGE CONNECTIONS	16, 17
RATING THE FURNACE	17, 18
TIMING THE GAS METER, MAIN BURNER ADJUSTMENT	18, 19
SAFETY CONTROLS	19 - 21
CIRCULATING AIR FILTERS	21
TEMP RISE, SERVICE INSTRUCTIONS	21, 22
SEQUENCE OF OPERATION, REMOVING AN EXISTING APPLIANCE	22 - 24
INSPECTING AND CLEANING THE HEAT EXCHANGER	24, 25
BLOWER OFF DELAY, EAC CONTROL, HUMIDIFIER CONTROL	25
WIRING DIAGRAMS	26, 27
LIGHTING INSTRUCTIONS	28

THIS FURNACE CONTAINS ELECTRONIC COMPONENTS WHICH REQUIRE A DEFINITE GROUND. PROVISIONS ARE MADE FOR CONNECTION OF THE GROUND. IF THIS PRODUCT IS NOT PERMANENTLY AND POSITIVELYGROUNDED NUMEROUS SERVICE CALLS MAY RESULT. A DEDICATED GROUND FROM THE MAIN POWER SUPPLY OR AN EARTH GROUND MUST BE PROVIDED.

HOUSEHOLD CO ALARMS. CURRENT LIMITATIONS TO THEIR EFFECTIVENESS REQUIRES THAT YOU OTHERWISE CONTINUE TO FOLLOW APPROPRIATE INSTRUCTIONS LOCATED IN THE "INSTALLATION & OPERATING INSTRUCTIONS" AND "USERS INFORMATION" MANUALS RELATING TO PROTECTING PERSONS FROM THE RISKS OF **CARBON MONOXIDE**. REVIEW EACH CO MANUFACTURERS' EXPLANATION OF THEIR UNIT'S CAPABILITIES AND FOLLOW THOSE INSTALLATION AND OPERATING MANUAL WHEN INSTALLING AND OPERATING THESE UNITS.

WARNING

THE CIRCULATING AIR DUCTS MUST BE COMPLETELY AND POSITIVELY SEALED TO PREVENT COMBUSTION PRODUCTS, INCLUDING **CARBON MONOXIDE**, FROM ENTERING THE AIR STREAM.

WARNING

TO ENSURE PROPER INSTALLATION AND OPERATION OF THIS PRODUCT, COMPLETELY READ AND UNDERSTAND THESE INSTRUCTIONS PRIOR TO ATTEMPTING TO ASSEMBLE, INSTALL, MAINTAIN, OR REPAIR. IF THESE INSTRUCTIONS ARE NOT FOLLOWED PRECISELY THERE IS A POTENTIAL OF **CARBON MONOXIDE** POISONING, WHICH CAN RESULT IN SERIOUS ILLNESS OR DEATH.

WARNING

THIS FURNACE WAS EQUIPPED AT THE FACTORY FOR USE WITH NATURAL GAS ONLY. L.P. CONVERSION, IF REQUIRED, MUST BE PERFORMED BY A QUALIFIED TECHNICIAN FAMILIAR WITH PERFORMING THIS TYPE OF CONVERSION. IF L.P. CONVERSION IS REQUIRED, ALL INSTRUCTIONS INCLUDED WITH THE FACTORY AUTHORIZED KIT MUST BE FOLLOWED. THE ONLY KIT THAT MUST BE USED FOR THIS CONVERSION IS THE FACTORY AUTHORIZED **LPM-03 (GSM)** OR **LPM-04 (GSMS)**. FAILURE TO FOLLOW THOSE INSTRUCTIONS EXPLICITLY MAY CAUSE FIRE, EXPLOSION, OR PERSONAL INJURY AND PROPERTY DAMAGE.

WARNING

IF PROHIBITED BY LOCAL CODE, DO NOT INSTALL A LIQUID PETROLEUM GAS BURNING APPLIANCE IN A PIT, BASEMENT, OR SIMILAR LOCATION WHERE, L.P., A HEAVIER THAN AIR GAS, CAN COLLECT IN LOW AREAS AND MAY NOT DISPERSE NATURALLY. APPLIANCES SO FUELED SHALL NOT BE INSTALLED IN AN ABOVE GRADE UNDER FLOOR SPACE OR BASEMENT UNLESS SUCH LOCATION IS PROVIDED WITH APPROVED MEANS FOR REMOVAL OF UNBURNED GAS.

GENERAL INFORMATION

These Installation and Operating Instructions are intended for use by fully qualified installation technicians. Some localities require the installer/servicer to be licensed. If in doubt, check with local authorities. The GSM furnace is a two stage heating appliance. For optimum use, the GSM furnace should use a two stage room thermostat. The GSMS furnace is a single stage furnace and uses a single stage room thermostat.

INSTALLATION: In the USA this furnace MUST be installed in accordance with the latest edition of the ANSI Z223.1 booklet entitled “National Fuel Gas Code” (NFPA 54), and the requirements or codes of the local utility or other authority having jurisdiction. In Canada this furnace must be installed in accordance with the current CAN/ CGA-B149.1 & 2 Gas Installation Codes, local plumbing or waste water codes and other applicable codes.
ANNUAL inspection of the furnace and it’s vent system are strongly recommended. It is the installer’s responsibility to inform the user of this importance.
Additional helpful publications are available from the NFPA are, NFPA 90A - Installation of Air Conditioning and Ventilating System and NFPA90B - Warm Air Heating and Air Conditioning System. These publications are available from:

National Fire Protection Association, Inc.
Batterymarch Park
Quincy, MA 02269

These furnaces meet the California NOX emission standards and the California efficiency standards.

The GSM & GSMS furnace may be installed as either a Direct Vent or Non-Direct Vent Furnace. These furnaces are designed to be an UPFLOW or HORIZONTAL furnace. The following sketch shows a typical installation:

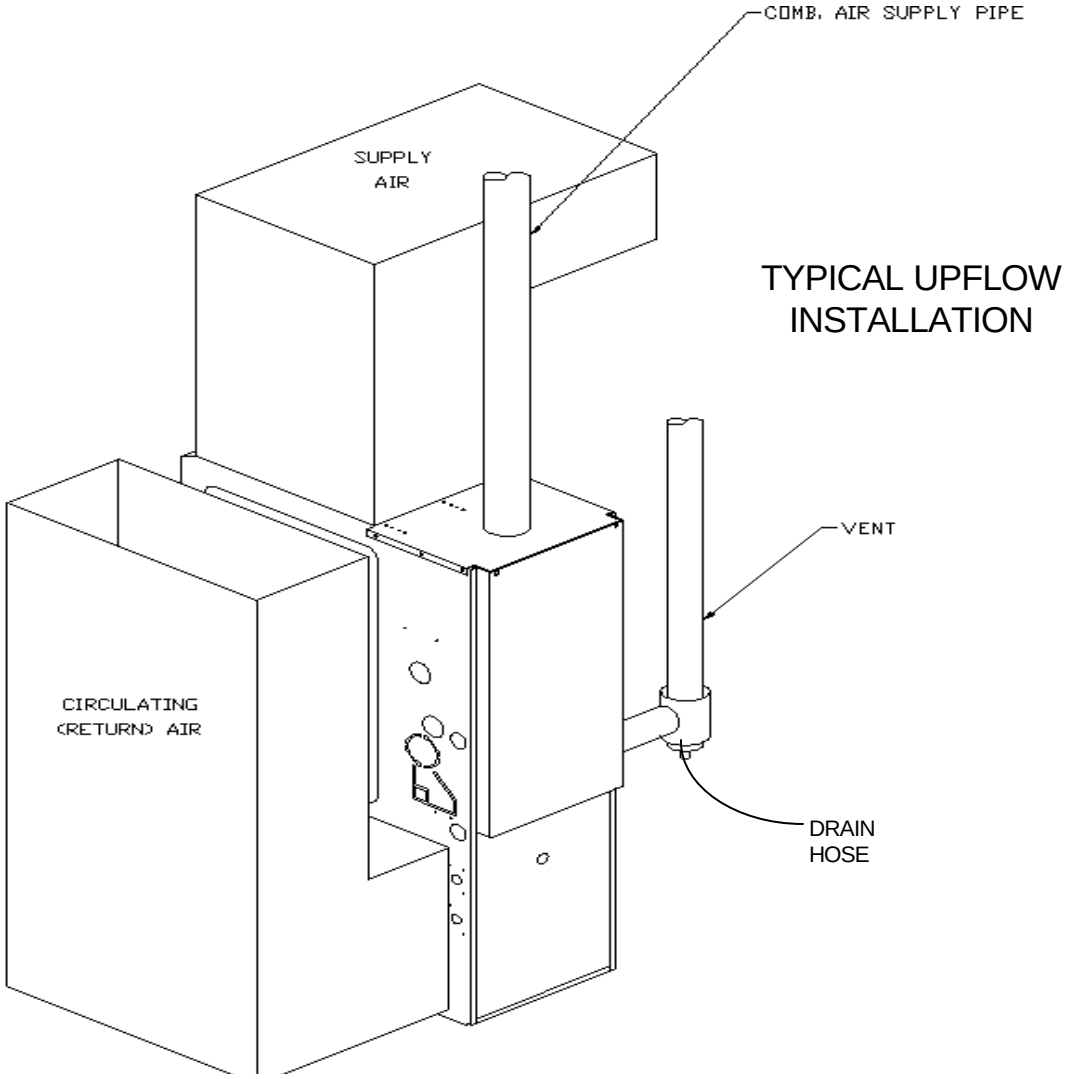

TYPICAL UPFLOW INSTALLATION

LOCATION

DO NOT install this furnace in a mobile home. This furnace is designed only for installation in buildings constructed on site and connected to ductwork. When installed in a utility room or closet, the door should be wide enough to allow the largest part of the furnace to enter, or to permit the replacement of another appliance, such as a water heater. This furnace is designed to be installed indoors only. **DO NOT** install outdoors. This furnace should be installed in such a manner so that it is protected from water. If any components should become submerged under water, replace those parts before returning the furnace to operation. **DO NOT** use as a construction heater. **DO NOT** install in an area where freezing can occur without properly protecting the unit and drain system. **DO NOT** install in a room designed to be used as a bedroom, bathroom, storage closet, or in any enclosed space with access only through such room or space. The furnace and it's individual shut-off must be disconnected from the gas supply piping system during any pressure testing of that system at test pressures in excess of 1/2 psig (3.5kPa) The furnace must be isolated from the gas supply piping system by closing it's individual manual shut-off valve during any pressure testing of the gas supply piping system at pressures equal to or less than 1/2 psig (3.5 kPa).

MINIMUM CLEARANCES TO COMBUSTIBLE SURFACES
Unobstructed front clearance of 24" for servicing is recommended.

VENT - **0"**	FRONT - **3"**	RIGHT SIDE - **1"**
LEFT SIDE - **1"**	REAR - **0"**	TOP OF PLENUM - **1"**

ACCESSIBILITY CLEARANCE, WHERE GREATER, SHOULD TAKE PRECEDENCE OVER MINIMUM FIRE PROTECTION CLEARANCE.
A gas fired furnace for installation in a residential garage must be installed so that the ignition source and burners are located not less than eighteen inches (18") above the floor and is protected or located to prevent physical damage by vehicles. A gas furnace must not be installed directly on carpeting, tile, or other combustible materials other than wood flooring.

WARNING

COMBUSTIBLE MATERIAL MUST NOT BE PLACED ON OR AGAINST THE FURNACE JACKET. THE AREA AROUND THE FURNACE MUST BE KEPT CLEAR AND FREE OF ALL COMBUSTIBLE MATERIAL INCLUDING GASOLINE AND OTHER FLAMMABLE VAPORS AND LIQUIDS. THE USER SHOULD BE CAUTIONED THAT THE FURNACE AREA MUST NOT BE USED AS A BROOM CLOSET OR FOR ANY OTHER STORAGE PURPOSE.

WARNING

A SOLID BASE PLATE IS SUPPLIED WITH THIS FURNACE AND MUST BE LEFT IN PLACE WHEN THE FURNACE IS INSTALLED WITH SIDE RETURN DUCTS. FAILURE TO LEAVE THIS BASE PLATE INSTALLED COULD CAUSE PRODUCTS OF COMBUSTION, INCLUDING **CARBON MONOXIDE**, TO BE CIRCULATED INTO THE LIVING SPACE AND CREATE A POTENTIALLY HAZARDOUS CONDITION, INCLUDING **CARBON MONOXIDE** POISONING. REFER TO THE SECTION ON "CIRCULATING AIR SUPPLY" FOR RETURN DUCT INSTRUCTIONS.

Before proceeding with this installation check the following;

- Correct clearance from combustible materials.
- Adequate accessibility for servicing.
- Flooring is not carpet or any other combustible material, except wood.
- In a garage, the furnace has been adequately elevated and protected from vehicle damage.
- Furnace area is free of flammable materials and vapors such as gasoline.
- Adequate combustion / ventilation air is supplied.
- Metal base plate is in place when using side(s) for return air return.

COMBUSTION AIR

The GSM & GSMS furnaces can be installed either as a Direct Vent or a Non-Direct Vent appliance. If installed as direct vent appliance the combustion air is to be taken from the outdoors via a 2" or 3" schedule 40 PVC pipe and terminate at the furnace burner box. As a non-direct vent furnace the combustion air is taken from the area which the furnace is installed. Avoid combustion air sources which contain flammable fumes and vapors, and gasses such as carbon monoxide, hydrogen sulfide, ammonia, chlorine, and halogenated hydrocarbons.

Direct Vent Combustion Air. As shown in the following illustration, the combustion air pipe is to originate at the furnace's burner box and terminate outside of the building. The diameter of the PVC combustion air pipe depends upon the furnace size, the length of pipe, and the quantity of fittings employed. The table found in the "Combustion/Vent Pipe Size" section of this manual outlines these sizing requirements. As a direct vent installation, the "Air for Combustion and Ventilation Air" requirements found in ANSI Z223.1, section 5.3 is not required for the furnace to operate correctly. However, other fuel burning appliances located in the same space as the furnace may still require that the area be serviced with Combustion and Ventilation Air consistent with ANSI Z223.1, section 5.3.

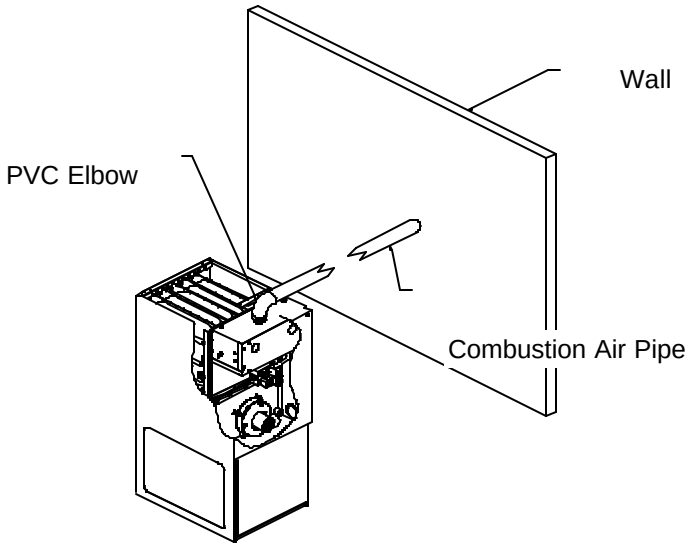

Non-Direct Vent Combustion Air. If the furnace is to be installed as a non-direct vent appliance, the combustion air pipe outlined previously is not used. In lieu of this pipe the 2" or 3" PVC fitting provided with this furnace is to be attached to the burner box. Also, a debris screen provided with this furnace is to be cemented into the inlet of the PVC fitting. See the following drawing for details.

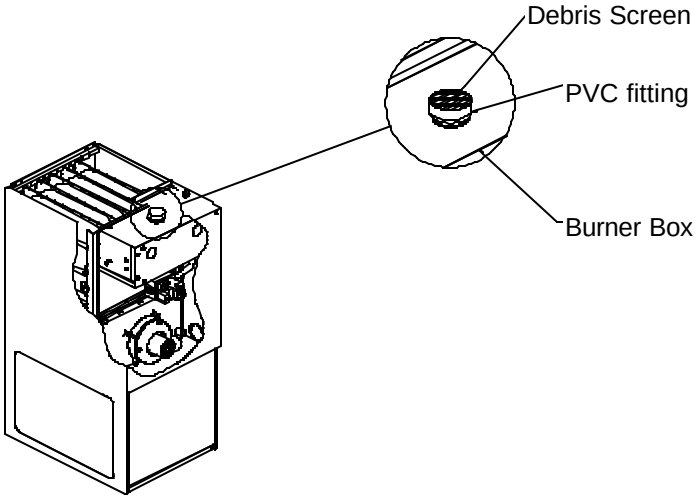

As a non-direct vent furnace, this must be installed in accordance with the combustion and ventilation air requirements found in ANSI Z221.3, section 5.3. When installed as a non-direct vent furnace in an area which is deemed as a confined area, see (ANSI Z223.1, section 1.7, “Space, Confined”) the requirements are as follows:

All Combustion Air Taken From The Inside Of The Building. When installed as a non-direct vent furnace and indoor air is used as the combustion air source, the space is to be provided with (2) permanent openings communicating directly with an additional room(s) of sufficient volume so that the combined volume of all spaces meets the criteria of an unconfined area. The total input of all gas burning equipment shall be used to determine the minimum size of each opening. Each opening shall be sized to be a minimum of 1 square inch of free area per 1,000 Btu/hr of combined input of gas utilization equipment in the area. The minimum area for each opening shall not be less than 100 square inches, and the minimum dimension of these openings shall not be less than 3 inches. One opening shall be commence within 12 inches of the top of the area, while the other opening shall commence within 12 inches of the bottom of the area.

All Combustion Air Taken From Outdoors. If installed as a non-direct furnace and outdoor air is selected as the combustion air source, then area shall be serviced with an opening(s) communicating directly with the outdoors by either of the following two methods. When calculating the minimum area for each opening the combined input of all gas utilization equipment is to be considered. Also, the minimum dimension for any opening shall not be less than 3 inches.

Method 1..... Two permanent openings communicating directly with the outdoors via. horizontal ducts shall be sized to be a minimum of 1 square inch per 4,000 Btu/hr or,
Two permanent openings communicating directly with the outdoors via. vertical ducts shall be sized to be a minimum of 1 square inch per 2,000 Btu/hr.

Method 2..... One permanent opening communicating directly with the outdoors via. a horizontal duct. This opening/duct shall be sized to be equal to 1 square inch per 3,000 Btu/hr, but not less than the sum of the areas all of the vent connectors in the confined space.

When installed as a direct vent furnace and the unit is **not** using the concentric vent kit (CVK-00) option, the combustion air is to be terminated in the following manner.

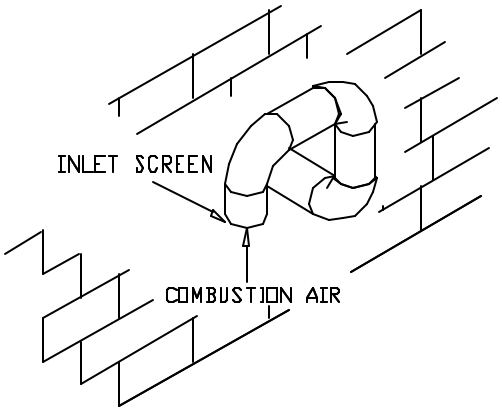

If the optional concentric vent kit (CVK-00) is used follow the instructions provided with this accessory.

COMBUSTION AIR / VENT PIPE SIZE

The vent / combustion air pipe system should be of the following sizes.

MODEL # GSM(S)	VENT. DIA.	COMB. AIR	O ELL	1 ELL	2 ELL	3 ELL	4 ELL
060-3	3”	2”	100’	100’	100’	100’	100’
060-3	2”	2”	75’	67.5’	60’	52.5’	45’
080-4	3”	3”	100’	100’	100’	100’	100’
080-4	2”	3”	75’	67.5’	60’	52.5’	45’
100-4	3”	3”	100’	100’	100’	100’	100’

VENTING

ANNUAL inspections of the furnace and it’s vent / combustion air supply is strongly recommended. It is the contractor’s responsibility to inform the user of this importance.
All venting shall be in accordance with Part 7, Venting of Equipment, of the National Fuel Gas Code, ANSI Z223.1, or applicable local building and / or air conditioning codes.
PROPER INSTALLATION OF THE VENT / COMBUSTION AIR SYSTEMS IS CRITICAL TO SAFE OPERATION OF THIS APPLIANCE. CAREFULLY READ AND UNDERSTAND THE INSTRUCTIONS IN THIS SECTION. EACH VENT AND COMBUSTION AIR SUPPLY PIPE MUST SERVE ONLY ONE APPLIANCE. DO NOT CONNECT TO AN EXISTING VENT OR CHIMNEY.

These furnaces are a condensing type appliance. The products of combustion are recirculated through a secondary coil. During this process the flue products are brought to a point below dew point. Thus the moisture present in the flue products condense leaving a liquid by-product. This by-product must be removed from the furnace and it’s collection system.

In addition, the vent temperatures are also considerably lower than conventional furnaces. This allows the use of low temperature plastic as the vent system. The recommended plastic is schedule 40 PVC, ABS, DWV (or equivalent if allowed by local code). See the previous chart for proper sizing. The use of two 45° elbows is suggested over the use of a single 90° elbow. The vent pipe must slope toward the furnace to properly drain the condensate. The drain trap and related parts must be installed as shown in the illustrations. Failure to follow these instructions can cause products of combustion including **CARBON MONOXIDE** entering the dwelling.

IF THIS FURNACE IS INSTALLED IN AN ATTIC OR SIMILAR AREA WHERE CONDENSATE OVERFLOW MAY BE A PROBLEM, AN AUXILIARY DRAIN PAN MUST BE INSTALLED UNDER THE FURNACE WITH THE AUXILIARY DRAIN LINES ROUTED TO THE OUTDOORS TO PREVENT WATER DAMAGE CAUSED BY LEAKS.

THE COMBUSTION PRODUCTS AND MOISTURE IN THE FLUE GASES WILL CONDENSE. THE CONDENSATE MAY FREEZE ON THE EXTERIOR WALL AND SURROUNDING SURFACES. SOME DISCOLORATION OR ETCHING IS TO BE EXPECTED.

THE VENT AND COMBUSTION AIR SUPPLY PIPES MUST BE INSPECTED ANNUALLY.

Visually check the vent terminal and combustion air supply pipe screens, clean if necessary.

Visually check for blockage of the condensate disposal system. Hoses may be disconnected to determine that proper flow is maintained. Should an obstruction be observed, it can be dislodged by forcing a stream of water through it using a device such as a garden hose.

Materials and procedures must conform to the ASTM Standards.
Pipe and Fittings ASTM 1785, D2465 and D2266
PVC Primer and Solvent Cement ASTM D2564
Procedure for Cementing Joints ASTM D2855 (ref.)
This appliance may be vertically or horizontally vented.

PROTECTION FROM FREEZING The vent pipe and drain assembly must be properly protected from freezing particularly if it is installed in an UNHEATED SPACE. Low wattage type heaters should be employed on the drain system. The vent pipe should be insulated using a one (1) inch thick closed foam insulation if exposed to the outdoors. For pipes located indoors or protected from the elements such as a garage, basement, etc., fiberglass with an R value of 7 or better is acceptable.

CAUTION

DO NOT install the vent pipe in the same chase with the vent from another fuel burning appliance, except with a GMN, GMPN, GSM, or GSMS.

DO NOT install the combustion air supply pipe and / or vent pipe under a deck or overhang where recirculation of combustion products can occur or a positive pressure may exist.

DO NOT install the vent pipe or the combustion air supply pipe within six (6) inches of another fuel burning appliance.

The drain trap must be easily accessible for checking and / or cleaning. It must be mounted on the furnace jacket in the holes provided.

DO NOT install the trap higher than the venter blower outlet.

DO NOT install this appliance in any area where freezing may occur without properly protecting the drain assembly.

CONSULT LOCAL CODES FOR SPECIAL ADDITIONAL REQUIREMENTS.

HORIZONTAL THROUGH THE WALL VENTING

This appliance may be horizontally vented through an exterior wall following the applicable instructions in the "VENTING" section in conjunction with these additional requirements.

ALL HORIZONTAL VENT INSTALLATIONS MUST BE MADE IN ACCORDANCE WITH THESE INSTRUCTIONS.

When selecting which exterior wall to penetrate, the following items should be taken into consideration:

1. Layout the combustion air and vent system to avoid the possibility of interference with beams, poles, posts, electrical wiring, plumbing, etc.
2. When possible the combustion air and vent termination should not be subjected to prevailing winds.
3. The combustion air intake and vent termination must be located at least twelve (12) inches above expected snowfall. Consideration should be made to past unusual snow falls.

- **DO NOT** locate the terminal less than seven (7) feet above public walkways. This applies to steps and stairwells.
- **DO NOT** locate the termination areas where condensate may present a problem such as flower beds, patios, etc.
- **DO NOT** locate within four (4) feet of a gas meter, electric meter, or gas regulator.
- **DO NOT** locate the vent terminal within four (4) feet of an adjacent building.

- **DIRECT VENT INSTALLATION - DO NOT** locate the vent terminal within twelve (12) inches of an operable window or door.
- **NON-DIRECT VENT INSTALLATION - DO NOT** locate the vent terminal less than (12) inches above a door or operable window.
- **NON-DIRECT VENT INSTALLATION - DO NOT** locate the vent terminal less than (4) feet below or (4) feet horizontally from any door, window or gravity air inlet into any building.
- **DO NOT** locate the vent terminal less than three (3) feet above, or (10) feet horizontally from, a forced air inlet into any building, other than the combustion air supply pipe.
- **DO NOT** locate the vent terminal within three (3) feet of an inside corner of a building or structure. Minor corners created by fireplace chimneys are excluded from this requirement.

To protect the exterior surface from staining due to the condensate, an aluminum plate or similar material may be installed surrounding the termination. This plate should extend approximately two (2) feet from the termination.

WARNING

The area surrounding the vent terminal and combustion air supply pipe must be kept free of snow, trash, bushes or any other obstacle which may cause a blockage. A blockage can cause **CARBON MONOXIDE** to enter the building.

SUPPORTING AND PITCHING THE VENT AND COMBUSTION AIR SUPPLY PIPE

All horizontal runs must be supported at least every five (5) feet and at joints with straps or hangers. No sags or dips are permitted. The pipes must be saddle supported only. Do not secure the hangers or straps tightly to the pipes to allow for expansion and contraction of the vent pipe. Maintain a 1/4 " per foot minimum pitch upward on the horizontal vent pipe from the drain to the terminal. This will allow the condensate to flow into the drain system and not out the terminal. Vertical runs must be supported minimum of every six (6) feet.

The combustion air supply pipe should be pitched slightly downward at the inlet to prevent water from entering the pipe.

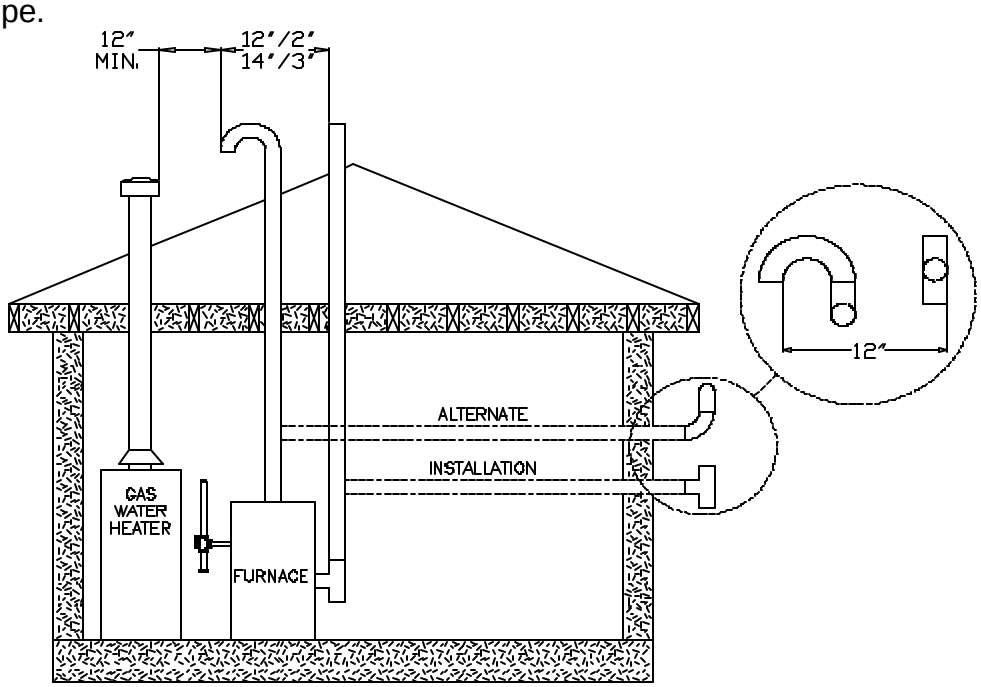

JOINING PIPE AND FITTINGS

Follow the instructions accompanying the Cleaner / Primer and Cement.

Observe all cautions printed on the label.

DO NOT CEMENT THE PIPE OR FITTINGS DIRECTLY TO THE VENTER. A RUBBER BOOT AND HOSE CLAMPS ARE PROVIDED FOR THIS PURPOSE.

CONDENSATE DRAIN

This furnace is designed to remove both sensible and latent heat from the combustion flue gas. As a result water vapor is condensed in the secondary heat exchanger. This condensate must be drained either to the outdoors or, where local code permits, to a sewage system. In areas where floor level drains are not available a condensate pump must be employed. This condensate pump must be constructed of corrosion resistant materials. It must also have an auxiliary switch which will shut down the appliance in the event of pump failure or drain tube blockage.

DO NOT run the condensate drain to an outdoor drain or to an unheated area where the possibility of freezing may occur.

Note: Some local codes require this condensate to be neutralized prior to disposal. See illustrations below for proper drain connections.

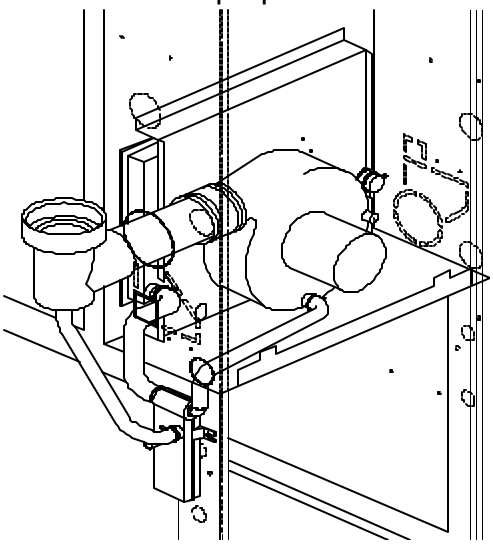

LEFT DRAIN & VENT

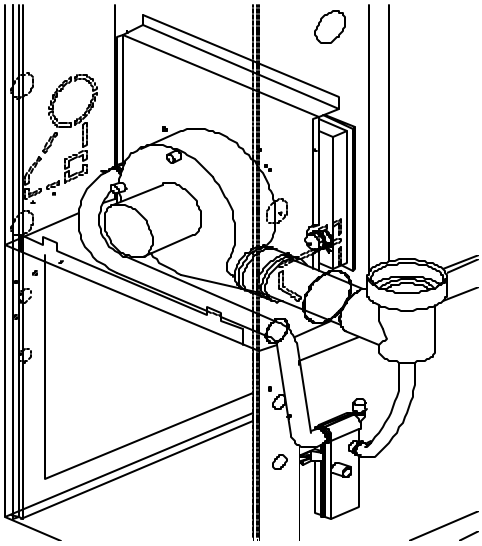

RIGHT DRAIN & VENT

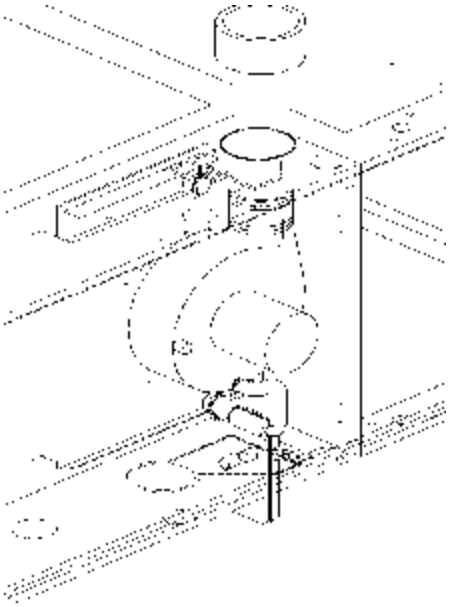

HORIZONTAL LEFT

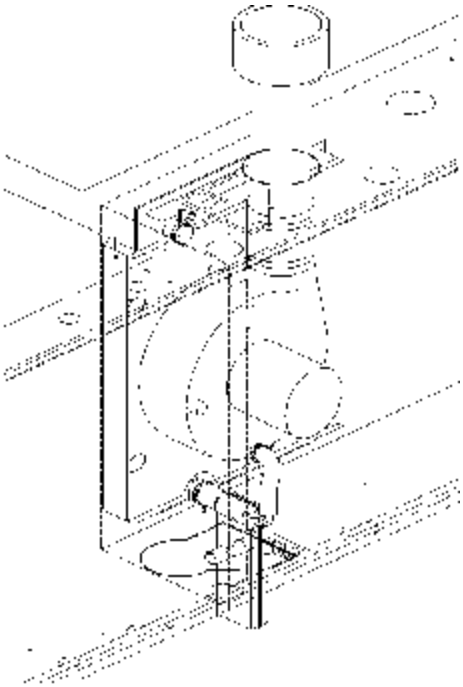

HORIZONTAL RIGHT

GAS PIPING & GAS PIPE CAPACITY TABLE

Check the rating plate to make certain that the unit is equipped to burn the type of gas supplied. Care should be taken after the installation of this appliance that the gas control valve is not subjected to high gas supply line pressure. In making connections, avoid strains as they may cause noise and damage the controls. Always use a back-up wrench when tightening the gas supply pipe to the gas control valve. Check for leaks in the gas supply piping using soap bubbles or other approved method. NEVER USE AN OPEN FLAME TO CHECK FOR GAS LEAKS. THIS PRACTICE MAY CAUSE A FIRE, EXPLOSION, BODILY HARM OR PROPERTY DAMAGE.

All pipe joint compound must be resistant to the action of L.P. gas. When connecting the gas service to the furnace, install a ground union joint and manual shutoff exterior to the furnace cabinet. This permits the control assembly to be easily removed. A 1/8" NPT plug on the supply pipe at the manual valve for the purpose of making pressure measurement must also be installed. The valve should be readily accessible for turning on or off. A capped drip leg must be installed in the gas supply pipe as close to the furnace as possible. The drip leg should be installed so that it incorporates a change of direction.

Refer to local codes or the above mentioned publications for proper location of the manual shutoff and drip leg lengths. The gas pipe must be sized to eliminate undue pressure drop. See pipe capacity table or consult your local utility. When checking the manifold pressure, use the pressure tap located on the gas valve. When checking the service pressure, use the field installed tap located on the manual shut-off or supply pressure tap located on the gas valve.

All gas piping must conform to local codes, or in the absence of local codes, to the National Fuel Gas Code ANSI Z223.1 and / or CAN/CGA B149 Installation Codes.

NOTE: Copper tubing must not be used for natural gas installations where more than .3 grains of hydrogen sulfide per 100 standard cubic feet of gas is present.
For installations in the Commonwealth of Massachusetts see Fuel Gas and Plumbing Code 248 CMR: Appendix C.

Capacity of gas pipe of different diameters and length in ft^3/hr, with a pressure drop of 0.3" W.C. and a specific gravity of 0.60 (natural gas).

*PIPE SIZE	LENGTH OF PIPE IN FEET							
	10	20	30	40	50	60	70	80
1/2	132	92	73	63	56	50	46	43
3/4	278	190	152	130	115	105	96	90
1	520	350	285	245	215	195	180	170
1 1/4	1050	730	590	500	440	400	370	350
1 1/2	1600	1100	890	760	670	610	560	530

* Nominal size of Iron Pipe in inches.

After the length of pipe has been determined, select the pipe size which will provide the minimum cubic per hour of gas flow for the required input of the appliance. In the case where more than one appliance utilizes the same supply pipe be sure to consider the sum of all appliances. The cubic feet required for the appliances should be determined using the following formula;
Cubic feet of gas required = Gas input of appliance (Btu/hr) / heating value of gas(Btu/hr)

The gas input of the appliance is marked on the specification plate. The heating value of the gas may be determined by contacting the gas utility or gas supplier. The GSM furnace is a two stage furnace with the first stage delivering approximately 60% of the total furnace input.

CAUTION

If the local utility permits the use of a flexible gas connector *ALWAYS USE A NEW FLEXIBLE CONNECTOR.* ***DO NOT*** *USE FLEXIBLE GAS LINES WHICH HAVE SERVICED ANOTHER APPLIANCE. AFTER A PERIOD OF TIME THESE LINES MAY BECOME BRITTLE AND WITH THE DISCONNECTION AND RECONNECTION CAN DEVELOP LEAKS.*

CIRCULATING AIR SUPPLY AND RETURN AIR

The circulating air supply may be taken from; 1) Outside the building, 2) return ducts from several rooms, 3) central return, 4) any combination of the above.

When a cooling coil is not installed it is recommended that the supply duct have an access panel so the heat exchanger can be viewed. This panel shall be of sufficient size to permit the entrance of a light or probe to assist in the observation of the heat exchanger integrity or sampling the air stream. It should be sealed to prevent air leakage during normal operation.

CAUTION

DO NOT take return air from bathrooms, kitchens, furnace rooms, garages, utility or laundry rooms or cold areas. If outside air is utilized it should not be taken from within 10 feet of an appliance vent outlet, a vent opening or a plumbing drainage system or the discharge from an exhaust system unless the outlet is three (3) feet above the outside air inlet. **DO NOT** take return air from areas where it can pick-up objectionable odors, fumes, or flammable vapors.

Note: When a combination of outdoor and indoor air is utilized the system should be designed and adjusted such that the temperature reaching the appliance will not drop below 50° F during heating operation. When this type of system is utilized the volume of air must not be reduced.

Plenum chambers and air ducts must be installed in accordance with the Standard for the Installation of Air Conditioning and Ventilating Systems, NFPA #90A, or the Standard for the Installation of Warm Air Heating and Air conditioning Systems, NFPA # 90B. If installed in parallel with a cooling unit the damper or other means used to control the flow of air must be adequate to prevent chilled air from entering the furnace, and if manually operated must be equipped with means to prevent operation of the other unit unless the damper is in the full heat or cool position.

NOTE: UPON INITIAL START-UP SOME SMOKE OR AN ODOR MAY BE PRESENT. THIS IS NORMAL AND SHOULD DISAPPEAR IN A SHORT AMOUNT OF TIME. IT IS RECOMMENDED THAT WINDOWS & DOORS BE OPENED UPON INITIAL START-UP TO VENT THIS NON-TOXIC SMOKE.

CAUTION

One of the most common causes of problems, including premature heat exchanger failure, in a forced air heating systems is insufficient return air.

The return air connections to the furnace should be approximately equal to or greater than the area of the warm air discharge. Consult local codes for specific requirements.

The blower speed should be adjusted to maintain the temperature rise range shown on the rating plate The total static pressure should not exceed 0.50” W.C.

WARNING

NEVER ALLOW THE PRODUCTS OF COMBUSTION TO ENTER THE RETURN DUCTWORK OR CIRCULATING AIR SUPPLY. ALL RETURN DUCTS MUST BE ADEQUATELY SECURED TO THE FURNACE AND COMPLETELY SEALED. ALL OTHER DUCTWORK MUST BE SECURED WITH APPROVED CONNECTIONS AND SEALED AIRTIGHT. THE VENT AND COMBUSTION AIR SUPPLY PIPES MUST BE PROPERLY INSTALLED AND SUPPORTED TO PREVENT LEAKAGE AS NOTED ELSEWHERE IN THESE INSTRUCTIONS. WHEN A FURNACE IS MOUNTED ON A PLATFORM IT MUST BE SEALED AIRTIGHT BETWEEN THE FURNACE AND RETURN DUCTWORK. THE FLOOR OR PLATFORM MUST PROVIDE SOUND PHYSICAL SUPPORT FOR THE FURNACE WITHOUT CRACKING, GAPS, SAGGING ETC. AROUND THE BASE AS TO PROVIDE A SEAL BETWEEN THE SUPPORT AND THE BASE. FAILURE TO PREVENT PRODUCTS OF COMBUSTION FROM ENTERING THE RETURN AIR SUPPLY MAY CAUSE SEVERE ILLNESS OR DEATH FROM **CARBON MONOXIDE** POISONING.

Install the return air to terminate through the base under the furnace. For installations where return air ducts cannot be run under the floor, the return air supply may be taken from the side(s). The solid bottom supplied on the furnace must remain in place.

WHERE THE MAXIMUM REQUIRED AIR FLOW IS 1800 CFM OR GREATER THE BOTTOM OR BOTH SIDES MUST BE UTILIZED FOR RETURN AIR SUPPLY. NEVER USE THE REAR OF THE FURNACE FOR THE RETURN CONNECTION.

WARNING

A SOLID METAL BASEPLATE IS SUPPLIED WITH THIS FURNACE. THIS BASEPLATE MUST BE IN PLACE WHEN THE FURNACE IS INSTALLED WITH SIDE(S) RETURN AIR DUCTS. FAILURE TO DO SO MAY PERMIT COMBUSTION PRODUCTS TO ENTER THE LIVING SPACE. THIS MAY CREATE POTENTIALLY HAZARDOUS CONDITIONS SUCH AS **CARBON MONOXIDE** POISONING OR DEATH.

ELECTRICAL SUPPLY CONNECTIONS

The electrical requirements are listed on the series and rating plate on the furnace. A separate supply line with a current overload device and a manual switch, where required, must be installed. Type “T” wire or equivalent with a minimum rating of 63°F (17°C) temperature rise must be run directly from the main power supply to the junction box in the furnace. Copper conductors are required.

Installation of the electrical supply should be in accordance with local codes. In the absence of local codes refer to the National Electrical Code ANSI/NFPA No. 70 (latest edition), which can be obtained from;

National Fire Protection Association
Batterymarch Park,
Quincy, MA 02269

In Canada refer to the latest edition of the Canadian Electrical Code C22.1 Part I.

WARNING

THE GAS SUPPLY PIPE MUST NEVER USED FOR GROUNDING PURPOSES.

CONTROL VOLTAGE CONNECTIONS

THERMOSTAT INSTALLATION:
Install the thermostat in accordance with the instructions accompanying the thermostat. Run the thermostat wires into the control compartment in the furnace. Connect the thermostat wiring as shown on the wiring diagram. The thermostat wiring should be a minimum of 18 gauge. Adhere to recommended color code to facilitate future troubleshooting. The thermostat should be located near the return air grille or opening. It should be approximately 5 feet from the floor level.
Never locate the thermostat where it will be influenced by heat generated from hot water pipes, lamps, televisions, direct sunlight, supply air registers, etc.
Interconnecting wiring must be secured and protected from damage or disconnection. The use of solderless connectors or equivalent is recommended.
The low voltage control wiring exiting the furnace is labeled “thermostat wiring”.

SETTING THE HEAT ANTICIPATOR

The following method should be used in measuring the amp draw of the control circuit to assure proper adjustment of the thermostat heat anticipator.

Wrap the “R” leg around a clip-on amp meter 10 times. Energize the furnace in the heat mode. Record the reading. Divide this reading by 10. Set the heat anticipator on the thermostat to match this reading.
EXAMPLE:
If the reading on the amp meter is ‘‘4”, divide this by 10. The anticipator setting will be .4 amps.

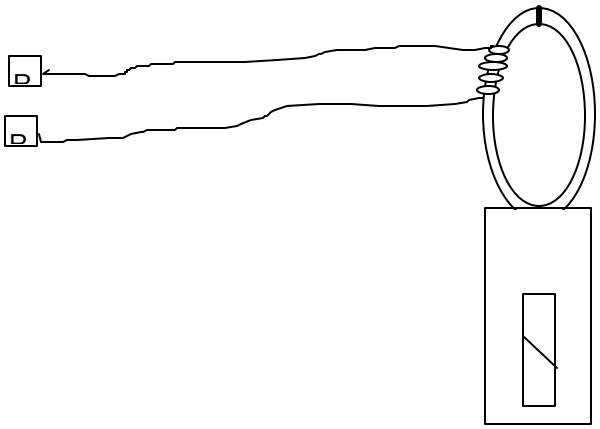

RATING THE FURNACE

This furnace is shipped from the factory equipped for use with natural gas. The following instructions are for use with natural gas at altitudes up to 2,000 feet. Should this appliance be converted to L.P., refer to the instructions included in the factory authorized L.P. conversion kit **LPM-03** (GSM) or **LPM-04** (GSMS). If for use at altitudes in excess of 2,000 feet refer to the instructions included in the factory authorized high altitude kit **(HA-02).**
It is important to check and adjust the input rate of the furnace to prevent an overfiring situation. Overfiring can cause premature heat exchanger failure. The input is controlled by the supply pressure, orifice size, manifold pressure and heating (calorific) value of the gas. The furnace is supplied with orifices sized for altitudes up to 2,000 feet using a heating value of approximately 1,000 Btu/hr and should not normally require change.

The supply pressure must be measured with this furnace and all other gas burning appliances in operation. The supply pressure must be adjusted to the pressure range stated on the series and rating plate. Applications for altitudes in excess of 2,000 feet require an orifice change. The orifices must be selected using the table below. *The furnace de-rate is 4% for each 1,000 feet above sea level*. This table is based upon a heating value of approximately 1,000 Btu/ft^3.

ALTITUDE	NAT. GAS ORIFICE SIZE
0 - 2,000	#45
3,000	#47
4,000	#47
5,000	#47
6,000	#48
7,000	#48

The input to the furnace must be checked AFTER reorificing.
For altitudes above 7,000 feet refer to appropriate section of the National Fuel Gas Code, ANSI Z223.1. To calculate the input of the furnace for installations in altitudes over 2,000 feet use the following formula;

CORRECTED INPUT = SERIES & RATING PLATE INPUT - (ALTITUDE X .04) X SERIES & RATING PLATE INPUT / 1000

EXAMPLE:
Corrected input for a 100,000 Btu/hr. appliance installed at an altitude of 6,000 ft. utilizing natural gas with a heating value of 1,000 Btu/ ft^3 is determined by-

Corrected Input = 100,000 - (6,000 X .04) X (100,000 / 1,000)
Corrected Input = 100,000 - (240 X 100)
Corrected Input = 100,000 - 24,000
Corrected Input = 76,000

Using the orifices sized as shown in the table for 6,000 feet (#48), a meter time of 48.0 seconds is measured. The actual firing rate of the furnace is

Input = 1,000 (heating value of the gas) X 3600 (constant) / 48.0 (meter time for 1 ft^3 of gas)
Input = 3,600,000 / 48.0
Input = 76,000 Btu/hr

In Canada, the series and rating plate input for the furnace apply to installations up to 2,000 feet (610m) above sea level. Kit HA-02 for natural and L.P. gases is required to convert furnaces from elevations of 2,000 to 4,500 feet (610m to 1,370m). Canadian certification applies to the installations of up to 4,500 feet above sea level. Installations above 4,500 feet is subject to acceptance by the local authorities having jurisdiction.

WARNING

BEFORE ATTEMPTING ANY SERVICE OR ADJUSTMENTS - INSURE THAT THE GAS AND ELECTRICAL SUPPLIES ARE “OFF”.

TIMING THE GAS METER

Use the following method to determine the firing rate of the furnace. The supply pressure tap should be located on the field installed piping or gas shut-off valve. The manifold pressure tap is located on the combination gas valve in the furnace and labeled “PRESSURE TAP”.

- Install a manometer graduated in tenths of an inch of water column on the supply pressure tap on the gas supply pipe.
- Remove the plug at the “Manifold” pressure tap on the gas valve & install a second manometer.
- Determine the size of gas meter used.
- Shut off all other gas fired appliances with the exception of the pilots.
- Adjust the room thermostat.
- Place furnace in operation. The GSM is a two-stage furnace; therefore, both stages are to be engaged when timing the gas meter.
- Check the supply pressure regulator until the pressure shown on the series and rating plate is obtained. Adjust if necessary.
- After 15 minutes of operation, time the meter with a stop watch for 2 revolutions and divide by 2.
- Use the appropriate column to determine the furnace input.
- If necessary, adjust the manifold pressure at the gas valve by removing the regulator cap and turning the adjustment screw clockwise to raise the pressure and counterclockwise to reduce the pressure. The manifold pressure must be between 3.2” W.C. and 3.8” W.C. for natural gas and 9.5” W.C. and 10.0” W.C. for L.P.(a field conversion is necessary for L.P.). The inability to obtain the proper pressure range will require reorificing. After reorificing, repeat the above steps to insure that the furnace input is adjusted properly.
- Turn off gas and electrical supply, remove manometers and replace any plugs which were removed. Use a pipe joint compound which is suitable for use with L.P. gas.
- Restore any other appliances affected to their normal operating mode.

METER TIME IN MINUTES AND SECONDS FOR NORMAL INPUT RATING OF FURNACES EQUIPPED FOR USE WITH NATURAL GAS AT 0 - 2,000 FEET ALTITUDE.

INPUT BTU/HR	METER SIZE FT3	HEAT VALUE 900 MIN. SEC.	HEAT VALUE 1,000 MIN. SEC.	HEAT VALUE 1040 MIN. SEC.	HEAT VALUE 1,100 MIN. SEC.
60,000	1	0 54	1 00	1 03	1 06
	10	9 00	10 00	10 24	11 00
80,000	1	0 41	0 45	0 47	0 50
	10	6 45	7 30	7 48	8 15
100,000	1	0 32	0 36	0 37	0 40
	10	5 24	6 00	6 14	6 36

MAIN BURNER ADJUSTMENT

The main burners do not need adjustment in normal installations.

SAFETY CONTROL FUNCTIONS AND CHECK-OUT PROCEDURE

GENERAL

In most cases the safety controls are wired is series with the “W” leg. It is imperative that these switches remain in the circuit. Never jumper, relocate or bypass any control. The proper function of the safety controls must be checked for proper operation at the time of start-up of the furnace.

WARNING

SHOULD ANY SAFETY CONTROL BE ALTERED, JUMPERED OR BYPASSED, A HAZARDOUS CONDITION SUCH AS FIRE OR THE POSSIBILITY OF CARBON MONOXIDE ENTERING THE BUILDING MAY OCCUR.

MAIN LIMIT SWITCH

The main limit switch is a 1/2” disc designed to shut off the burner gas should the outlet (bonnet) temperature exceed the maximum design outlet air temperature. This switch is not adjustable. To check the operation, block the return air flow through the unit temporarily. The limit switch should function and shut the burner gas off within a few minutes. Remove the blockage and allow the switch to cool sufficiently before reestablishing burner flames.

VENT PRESSURE SWITCH(S)

This furnace utilizes a vent pressure switch(s) which prevents the furnace from operating should any portion of the vent system become restricted or a venter failure occur. The GSM uses (2) two individual vent pressure switches. One switch is to control the first stage operation and another for the second stage operation. To check this switch, place the furnace in operation and remove the hose from the switch. The burner gas will become extinguished. Replacing the hose will allow the furnace to operate normally.

COMBUSTION AIR SUPPLY SWITCH

The switch is connected to the combustion box enclosing the burner section of this furnace. It will function should a restriction occur in the combustion air supply pipe. To check this switch, block the combustion air supply pipe at it’s termination. The burner gas should extinguish.

FLAME SENSOR

Ignition is provided by a hot surface ignition system. The burner flames should be extinguish if the flame sensor fails to detect the presence of the burner flame. To test , disconnect the flame sensor wire before placing the furnace in operation. The hot surface igniter should glow and the burners ignite. However, the burners should shut off after a few seconds of operation. Disconnect the electrical supply to the furnace, reinstall the disconnected sensor wire and reset the power supply to restore the furnace to it’s normal operation.

FLAME ROLL-OUT SWITCH

This furnace is equipped with a flame roll-out switch. This manually resetable switch is a 1/2” disc type and is non-adjustable. This switch is designed to shut down the burner gas in the event that flames are detected outside the heat exchanger. Should this switch function, contact a qualified service person to determine the cause of function before resetting. To reset this switch press the button on top of the switch after the furnace has cooled. To test the operation of the switch with the furnace in operation, place an open flame on the disc portion of the switch. The switch should function to shut down the burner gas**. Wait until the furnace has cooled sufficiently before resetting the switch.**

BLOWER DOOR INTERLOCK SWITCH

The purpose of the switch is to disconnect electrical power to the furnace should the blower door become dislodged, removed, or not properly reinstalled such as when performing a filter change. ALLOWING THE FURNACE TO OPERATE WITHOUT THE BLOWER DOOR BEING SECURELY IN PLACE CAN CAUSE COMBUSTION PRODUCTS TO BECOME CIRCULATED THROUGHOUT THE LIVING AREA WHICH CAN CAUSE SERIOUS ILLNESS OR **CARBON MONOXIDE** POISONING. To test the operation of this switch, place the furnace in operation and remove the blower access door. The burner flames will extinguish and the venter and circulating air blowers should both stop. To restore the unit to normal operation, shut off the electrical power to the unit, replace the blower access door and restore the electrical power.

STACK OVER-TEMPERATURE SWITCH

Located on the venter blower housing, this switch is designed to shut down the burners should the circulating air blower fail or the secondary coil become blocked. To test this switch, bypass the main limit switch, disconnect the circulating air blower, and place the furnace in operation. After a short period of time this switch should function shutting down the burners. IT IS VERY IMPORTANT TO REMOVE THE BYPASS FROM THE MAIN LIMIT SWITCH AND REPLACE THE WIRES WHICH WERE DISCONNECTED FOR THIS TEST prior to returning the furnace in normal operation.

INTEGRATED FAN / IGNITION CONTROL

This furnace is equipped with a combination ignition module and fan control. The ignition source is a hot surface igniter. This device ignites the burners upon a call for heat. It also controls the venter blower and the various speed selections of the circulating air blower. This control is located in the circulating air blower compartment.

Upon a demand for heat the venter is energized. After a short purge, the hot surface igniter is energized. The burners are ignited after a (17) second delay and are proven by the flame sensor.

The circulating air blower is energized approximately thirty (30) seconds after the burners are ignited. The circulating air blower is de-energized approximately two and one half (2 1/2) minutes after the burners are extinguished.

THIS CONTROL IS NOT FIELD ADJUSTABLE OR SERVICEABLE.

CIRCULATING AIR FILTERS

One of the most common causes of problems in a forced air heating system is blocked or dirty filters. Circulating air filters must be inspected monthly for dirt accumulation and replaced if necessary. Failure to maintain clean filters can cause premature heat exchanger failure.

A new home may require more frequent replacement until all construction dust and dirt is removed. Circulating air filters are to be installed in the return air duct, external to the furnace cabinet.

CAUTION

Before performing any service on this furnace, including checking or replacing circulating air filters - disconnect main power.

DO NOT operate the furnace for extended periods of time without filters in place. Dust and dirt in the air will restrict the air movement over the secondary coil causing nuisance cycling of the safety controls and cause a no heat condition

MINIMUM FILTER SIZES

INPUT BTU/H	FILTER SIZE	TYPE
60,000	240 IN^2 / 480	PERM. / DISPOSABLE
80,000	320 IN^2 / 640	PERM. / DISPOSABLE
100,000	363 IN^2 / 727	PERM. / DISPOSABLE

TEMPERATURE RISE

The temperature difference between the outlet air and the inlet air of the furnace is known as the temperature rise. This furnace is designed to operate within the temperature rise displayed on the furnace series and rating plate. To ensure satisfactory performance, the temperature rise of the furnace must be measured and adjusted, if necessary. Use the following procedure to measure and adjust the temperature rise;

- Prior to starting the furnace, visually inspect all joints and seams in the supply and return air ducts for leaks. Repair them if necessary.
- Adjust the room thermostat to obtain constant operation.
- Allow the furnace to operate for at least fifteen (15) minutes.
- With an accurate thermometer measure the temperature at the return air grille. If a combination indoor / outdoor system is used, the temperature must be measured downstream of the connection.
- Measure the outlet air tempreture at a point approximately twelve to eighteen (12 -18) inches above the furnace. It may be necessary to measure the outlet air at several places to obtain an accurate average. NOTE: IF AN AIR CONDITIONING COIL IS INSTALLED, TAKE CARE SO AS NOT TO DAMAGE THAT COIL.
- Adjust the temperature by changing circulating air blower speed tap.

MOTOR LUBRICATION AND MAINTENANCE

The circulating air blower is equipped with sleeve bearings which are permanently lubricated by the motor manufacturer and require no lubrication. At the time of the monthly filter inspection clean the exterior of the circulating air motor, especially around the perimeter air holes to prevent the possibility of overheating due to an accumulation of dust or dirt on the windings and motor casing. As suggested elsewhere in these instructions, the air filters should be kept clean. Dirty filters will restrict the air flow over the motor windings and possibly cause an overheating condition.

The venter motor has bearings which are prelubricated by the motor manufacturer and require no attention.

SERVICE INSTRUCTIONS

- **DO** keep the circulating air filters clean. The heating system will operate more efficiently and economically.
- **DO** arrange drapes and furniture so that the supply air registers and return air grilles are unobstructed.
- **DO** close doors and windows. This will reduce the heat load on the system.
- **DO** avoid excessive use of bathroom and kitchen exhaust fans.
- **DO NOT** let heat generated by televisions, lamps, direct sunlight, etc. to influence the thermostat operation.
- Exclusive of the mounting platform, keep all combustible materials at least three (3) feet from the furnace.
- **DO NOT** use the furnace room as a storage area.
- **DO NOT** store gasoline or other flammable liquids or vapors in the vicinity of the furnace.

SEQUENCE OF OPERATION

This appliance is controlled by the thermostat via control voltage. It is the obligation of the installer to educate the user on the proper use of the thermostat and the sequence of operation in both the heating and cooling modes. It is also important that any repair or service be performed by a QUALIFIED service person, not by the user.

HEATING MODE (W1 GSM ONLY)

- Main limit switch closed
- Thermostat calls for heat
- Vent motor starts- high speed
- **W1** - Vent pressure switch closes
- Vent motor switches to low speed
- 15 second prepurge
- Ignition device activated
- 17 second warm-up period
- Gas valve opens on low fire
- Burners ignite and flame is sensed
- Blower starts on low speed 30 seconds after flame sense
- Furnace remains in operation until thermostat is satisfied
- Burners are extinguished
- Vent blower post purge
- Indoor blower shuts down after predetermined delay

HEATING MODE W2 (GSM ONLY)

- Same operation as **W1** until "blower starts" operation
- Vent motor switches to high speed
- **W2** pressure switch closes
- Gas valve switches to high fire
- Blower switches to medium speed
- Operation continues until **W2** is satisfied and furnaces switches to **W1** operation

HEATING MODE (GSMS ONLY)

- Main limit switch closed
- Thermostat calls for heat
- Vent motor starts
- Vent pressure switch closes
- 15 second prepurge
- Ignition device activated
- 17 second warm-up period
- Gas valve opens
- Burners ignite and flame is sensed
- Blower starts on low speed 30 seconds after flame sense
- Furnace remains in operation until thermostat is satisfied
- Burners are extinguished
- 30 second vent blower post purge
- Indoor blower shuts down after predetermined delay

COOLING MODE (GSM & GSMS)

- The control checks for an open limit. If an open limit is detected the furnace will remain inoperable until the condition is corrected. During an open limit condition the circulating air blower will be energized. The status light will blink four (4) times.
- A demand for cooling is initiated.
- The condenser contactor will close.
- After approximately seven (7) seconds the circulating air blower will start on the cooling speed.
- After the room thermostat is satisfied the condenser contractor will open.
- The circulating air blower will remain in operation for approximately sixty (60) seconds.

REMOVING AN EXISTING APPLIANCE

When replacing an existing appliance, the resulting installation must comply with all local codes, or in the abscence of local codes, to the National Fuel Gas Code ANSI Z223.1 and/or CAN/CGA B149 installation codes and these installation instructions. If the installation of this furnace requires that an existing appliance be removed from a venting system which still serves another gas fired appliance, this may require that the existing vent be re-sized. The following steps shall be performed with each appliance connected to the venting system placed in operation while any other appliance connected to the venting system are not in operation;

a) Seal any unused openings in the venting system;

b) Inspect the venting system for proper size and horizontal pitch, as required in the National Fuel Gas Code, ANSI Z223.1 or the CAN/CGA B149 Installation Codes and these instructions. Determine that there is no blockage or restriction, leakage, corrosion and other deficiencies which could cause an unsafe condition;

c) In so far as practical close all building doors and windows and all doors between the space in which the appliance(s) connected to the venting system are located and other spaces in the building. Turn on clothes dryers and any other appliance not connected to the venting system. Turn on any exhaust fans such as range hoods and bathroom exhausts, so they shall operate at their maximum speed. Do not operate a summer exhaust fan. Close fireplace dampers;

d) Follow lighting instructions. Place the appliance being inspected in operation. Adjust the thermostat so the appliance shall operate continuously;

e) Test for draft hood equipped appliance spillage at the relief opening after five (5) minutes of burner operation. Use the flame of a match or candle;

f) After it has been determined that each appliance connected to the venting system properly vents when tested as outlined above, return all doors, windows, exhaust fans, fireplace dampers and any other gas-burning appliance back to their previous condition of use;

g) If improper venting is observed during any of the above tests, the venting system must be corrected.

If re-sizing of the existing vent is required this shall be sized in accordance with Appendix G of the National Fuel Gas Code, ANSI Z223.1 or CAN/CGA B149 Installation Codes.

INSPECTING & CLEANING THE HEAT EXCHANGER

CAUTION

Label all wires prior to disconnection when servicing controls. Wiring errors can cause dangerous and improper operation. Verify proper operation after servicing.

It is the obligation of the installer to advise the user to have the furnace inspected and cleaned annually. To clean the heat exchanger perform the following:

- Adjust the room thermostat to its lowest setting.
- Turn off the gas and electric supply to the furnace.
- Remove the control access door.
- Open the gas supply union.
- Disconnect the gas supply line attached to the gas valve.
- Remove the wires connected to the gas valve.
- Remove the burner box cover.
- Disconnect the combustion air supply pipe.
- Remove the burner box assembly. Care must be exercised to avoid damage to the hot surface igniter.
- Inshot burners should not require cleaning. But if they exhibit signs of corrosion they can be cleaned by brushing with a stiff wire brush.
- Remove the vent from the furnace venter blower.
- Remove the venter blower and collector box.
- With a stiff wire brush on a flexible handle remove any loose scale from the heat exchanger at both the flue and burner openings.
- Use a 1/2” diameter brush to remove any deposits in the secondary heat exchanger.
- With a vacuum remove any loose scale dislodged and any additional debris found in the heat exchanger.
- Visually inspect the heat exchanger cells for any failures using a bright light.
- **If any failures are discovered it is important to disable the furnace and notify the user to ensure that it does remain inoperable until repairs are implemented.**
- Reassemble the furnace in the reverse order. Note: No additional screws or wires are supplied with this product. All components must be reassembled to avoid an unsafe condition.
- Reconnect gas supply and check for leaks using a soap solution. If a flexible gas line is used examine it for cracks or weakness. Replace if necessary.
- Restore electrical power.
- Follow the lighting instructions to place the furnace into operation.

Note - It is important to use a pipe joint compound that is resistant to the effects of L.P. gas.

BLOWER OFF DELAY (GSMS ONLY)

In the heating mode, the time period between the extinguishing of the burners and the circulating blower turning off, is known as the "Blower Off Delay." This time is factory preset at 150 seconds. The 150 second delay can be changed to 120 or 90 seconds by changing the position of a jumper on the Ignition Control.

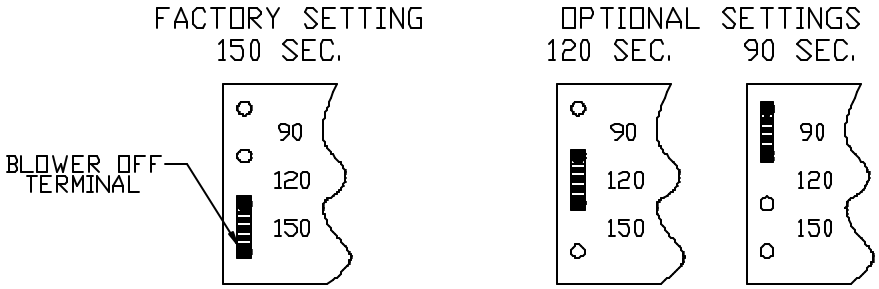

HUMIDIFIER CONTROL (GSMS ONLY)

The screw terminal on the ignition control called "HUM" is designed to give a 24 VAC signal to a humidistat in the heating mode. DO NOT USE ON HUMIDIFIERS WHICH USE 115 VAC.

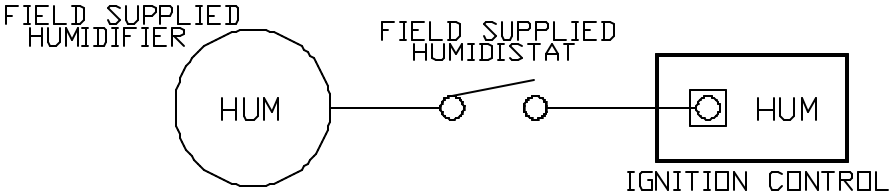

ELECTRONIC AIR CLEANER CONTROL (GSMS ONLY)

The red-capped terminal on the ignition control marked "EAC" is to supply 115 VAC to an Electronic Air Cleaner. This terminal is powered in both the heating and air conditioning modes when the circulating blower is operating.

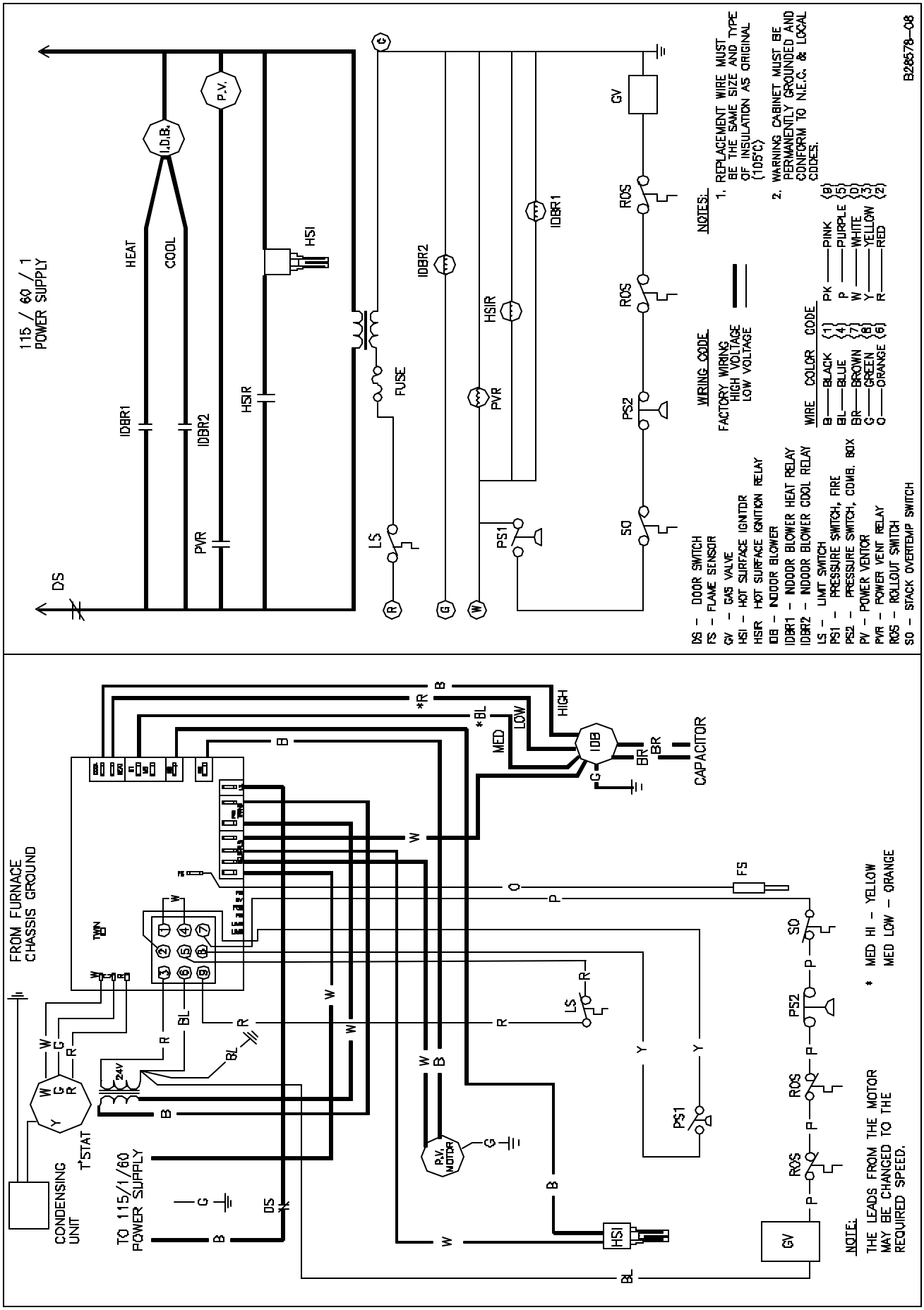
115 / 60 / 1
POWER SUPPLY
HEAT
COOL
I.D.B.
P.V.
HSI
IDBR1
IDBR2
HSIR
PVR
FUSE
LS
PS1
PS2
SO
ROS
GV
DS
NOTES:
1. REPLACEMENT WIRE MUST BE THE SAME SIZE AND TYPE OF INSULATION AS ORIGINAL (105°C)
2. WARNING CABINET MUST BE PERMANENTLY GROUNDED AND CONFORM TO N.E.C. & LOCAL CODES.
WIRING CODE
FACTORY WIRING
HIGH VOLTAGE
LOW VOLTAGE
WIRE COLOR CODE
B — BLACK (1)
BL — BLUE (4)
BR — BROWN (7)
G — GREEN (8)
O — ORANGE (6)
PK — PINK (9)
P — PURPLE (5)
W — WHITE (0)
Y — YELLOW (3)
R — RED (2)
DS – DOOR SWITCH
FS – FLAME SENSOR
GV – GAS VALVE
HSI – HOT SURFACE IGNITOR
HSIR – HOT SURFACE IGNITION RELAY
IDB – INDOOR BLOWER
IDBR1 – INDOOR BLOWER HEAT RELAY
IDBR2 – INDOOR BLOWER COOL RELAY
LS – LIMIT SWITCH
PS1 – PRESSURE SWITCH, FIRE
PS2 – PRESSURE SWITCH, COMB. BOX
PV – POWER VENTOR
PVR – POWER VENT RELAY
ROS – ROLLOUT SWITCH
SO – STACK OVERTEMP SWITCH
B28578-08
FROM FURNACE
CHASSIS GROUND
CONDENSING
UNIT
T'STAT
TO 115/1/60
POWER SUPPLY
24V
TWIN
P.V.
MOTOR
HIGH
MED
LOW
IDB
CAPACITOR
FS
* MED HI – YELLOW
MED LOW – ORANGE
NOTE:
THE LEADS FROM THE MOTOR
MAY BE CHANGED TO THE
REQUIRED SPEED.

GSMS ONLY

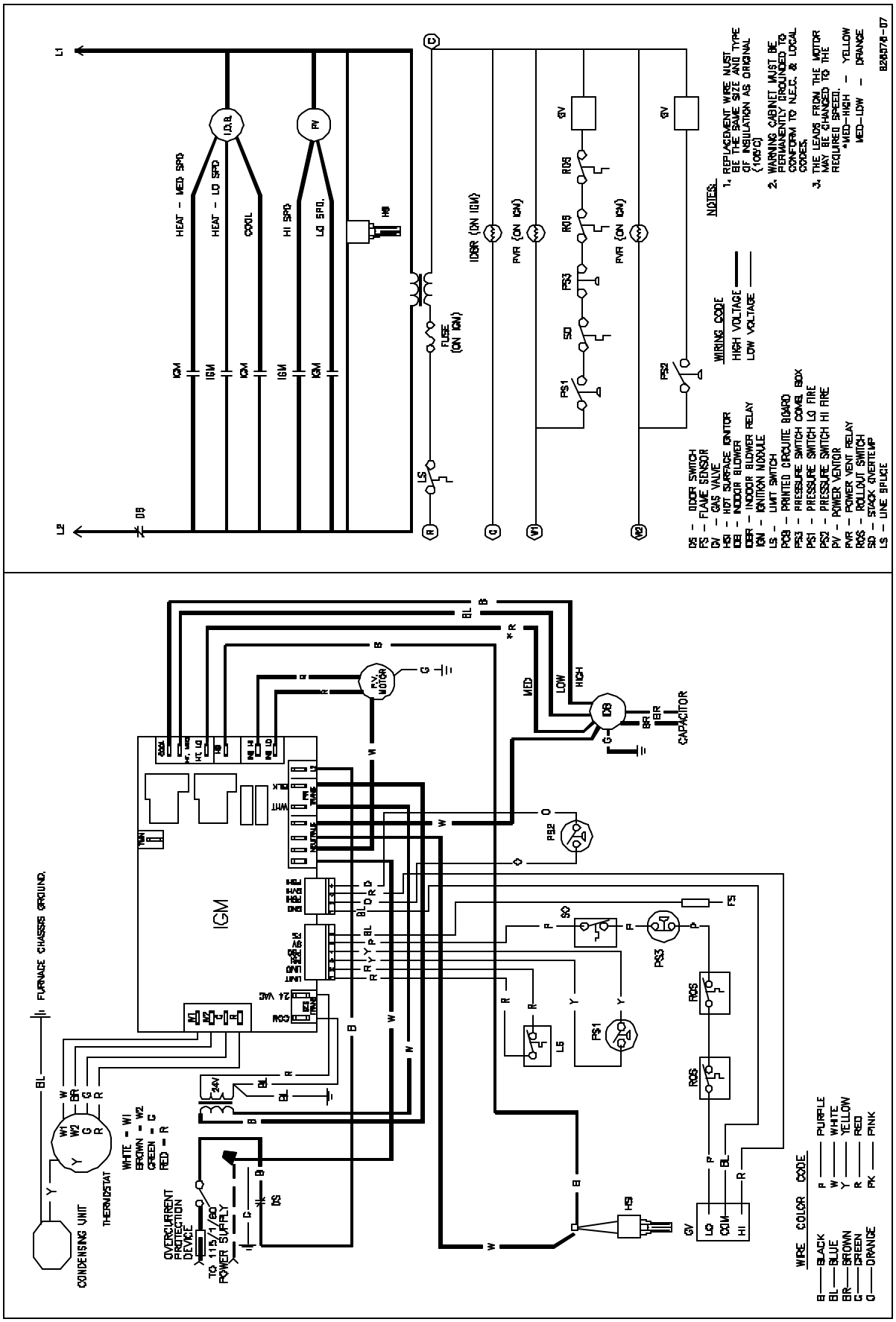
L1
L2
HEAT - MED. SPD.
HEAT - LO SPD.
COOL
HI SPD.
LO SPD.
IGM
PV
HS
FUSE (ON IGM)
LS
DOOR (ON IGM)
PVR (ON IGM)
GV
ROS
PS3
SO
PS1
PS2
NOTES:
1. REPLACEMENT WIRE MUST BE THE SAME SIZE AND TYPE OF INSULATION AS ORIGINAL (105°C)
2. WARNING CABINET MUST BE PERMANENTLY GROUNDED TO CONFORM TO N.E.C. & LOCAL CODES.
3. THE LEADS FROM THE MOTOR MAY BE CHANGED TO THE REQUIRED SPEED.
*MED-HIGH - YELLOW
MED-LOW - ORANGE
824574-07
WIRING CODE
HIGH VOLTAGE
LOW VOLTAGE
DS - DOOR SWITCH
FS - FLAME SENSOR
GV - GAS VALVE
HS - HOT SURFACE IGNITOR
IDB - INDOOR BLOWER
IDBR - INDOOR BLOWER RELAY
IGM - IGNITION MODULE
LS - LIMIT SWITCH
PCB - PRINTED CIRCUITE BOARD
PS3 - PRESSURE SWITCH COMB. BOX
PS1 - PRESSURE SWITCH LO FIRE
PS2 - PRESSURE SWITCH HI FIRE
PV - POWER VENTOR
PVR - POWER VENT RELAY
ROS - ROLLOUT SWITCH
SO - STACK OVERTEMP
LS - LINE SPLICE
FURNACE CHASSIS GROUND.
CONDENSING UNIT
THERMOSTAT
WHITE - W1
BROWN - W2
GREEN - G
RED - R
OVERCURRENT PROTECTION DEVICE
TO 115/1/60 POWER SUPPLY
24V
COM
24 VAC
TRANS
MAINTENANCE
WHT
BLK
PRESSURE
FLAME
IGNITION
LIMIT
GND
SYSTEM
STATUS
HI
COM
LO
HI
LO
MED
HIGH
LOW
CAPACITOR
PV MOTOR
WIRE COLOR CODE
B — BLACK
BL — BLUE
BR — BROWN
G — GREEN
O — ORANGE
P — PURPLE
W — WHITE
Y — YELLOW
R — RED
PK — PINK

GSM ONLY

These instructions are also on the furnace

FOR YOUR SAFETY READ BEFORE OPERATING

WARNING If you do not follow these instructions exactly, a fire or explosion may result causing property damage, personal injury or loss of life.

A. This appliance does not have a pilot. It is equipped with an ignition device which automatically lights the burners. Do not try to light the burners by hand.

B. BEFORE OPERATING smell around the appliance area for gas. Be sure to smell next to the floor because some gas is heavier than air and will settle on the floor.

WHAT TO DO IF YOU SMELL GAS

- Do not try to light any appliance.
- Do not touch any electric switch; do not use any telephone in your building.
- Immediately call your supplier from a neighbor's phone. Follow the gas suppliers instructions.
- If you cannot reach your gas supplier, call the fire department.

C. Use only your hand to move the gas control switch or knob. Never use tools. If the gas control switch or knob will not operate, don't try to repair it, call a qualified service technician. Force or attempted repair may result in a fire or explosion.

D. Do not use this appliance if any part has been under water. Immediately call a qualified service technician to inspect the appliance and to replace any part of the control system and any gas control which has been under water.

OPERATING INSTRUCTIONS

1. STOP! Read the safety information above on this label.
2. Set the thermostat to lowest setting.
3. Turn off all electric power to the appliance.
4. This appliance is equipped with an automatic ignition system which automatically lights the burners. Do not try to light the burners by hand.
5. Remove control access panel.
6. Move the gas control switch or knob to "OFF".

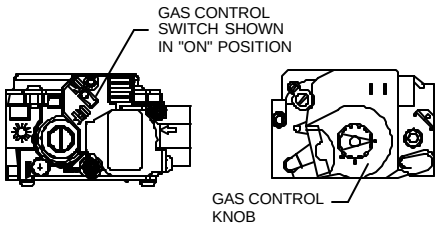

7. Wait five (5) minutes to clear out any gas. If you then smell gas, STOP! Follow "B" in the safety information above on this label. If you don't smell gas, go to the next step.
8. Move the gas control switch or knob to "ON".
9. Replace control access panel.
10. Turn on all electric power to the appliance.
11. Set the thermostat to the desired setting.
12. If the appliance will not operate, follow the instructions "To Turn Off Gas To Appliance" and call your service technician or gas supplier.

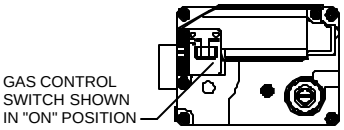

TO TURN OFF GAS TO APPLIANCE

1. Set the thermostat to its lowest setting.
2. Turn off all electric power to the appliance if service is to be performed.
3. Remove control access panel.
4. Move the gas control switch or knob to "OFF". Do not force.
5. Replace control access panel.

WARNING: Improper installation, adjustment, alteration, service or maintenance can cause injury or property damage. Refer to the user's information manual provided with this furnace. For assistance or additional information consult a qualified installer, service agency or the gas supplier.

This furnace must be installed in accordance with the manufacturers instructions and local codes. In the absence of local codes follow the National Fuel Gas Code, ANSI Z223.1.

For indoor installation.

PGB & PGJ
For outdoor installation only.

WARNING: If not installed, operated and maintained in accordance with the manufacturer's instructions, this product could expose you to substances in fuel combustion which can cause death or serious illness and which are known to the State of California to cause cancer, birth defects or other reproductive harm.
This product contains fiberglass insulation. Fiberglass insulation contains a chemical known by the State of California to cause cancer.

FOR YOUR SAFETY Do not store or use gasoline or other flammable vapors and liquids in the vicinity of this or any other appliance.

B14933-228